Tel: 01429 269 757
Web: www.geargb.co.uk

GearGB
Hart Industrial Tools
White Hart Court,
Hart Village,
Hartlepool
TS27 3AW

Genuine Honda GX630 / GX660 / GX690 / iGX700 / iGX800 V-twin Engine Exhaust Left + Gaskets

Prod Code: HOND-ACCES-1963

06183-ZCK-8000 Genuine Honda Exhaust. Starter Motor Side

Includes FREE exhaust gaskets

SPECIFICATIONS	
Fits	Honda GX630 / GX660 / GX690 / iGX700 / iGX800 engines
Honda Part Number	06183-ZCK-8000

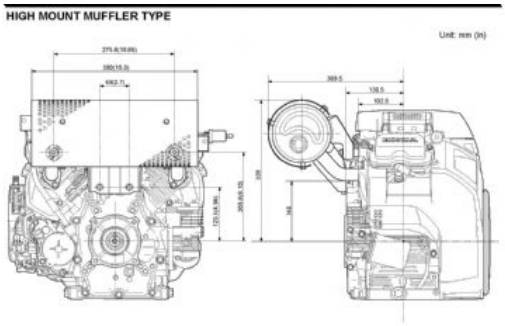

GearGB
Hart Industrial Tools
White Hart Court,
Hart Village,
Hartlepool
TS27 3AW