Tel: 01429 269 757
Web: www.geargb.co.uk

GearGB
Hart Industrial Tools
White Hart Court,
Hart Village,
Hartlepool
TS27 3AW

Honda GX340 LXQ4 2:1 Reduction Engine

Prod Code: 3000-HOND-11LXQ4

2:1 Reduction Box Petrol Engine.

The GX340 engine is suitable for a wide range of heavy-duty applications such as construction equipment, tillers, generators, welders, pumps and other industrial applications.

Engine features:

•The OHV design enhances combustion efficiency
•A variable ignition timing (digital CDI) results in high power output, reduced fuel consumption and excellent exhaust emissions performance.
•Easy starting with an automatic decompression system and an easy-to-grip soft recoil starter handle
•High quality materials and purpose-built components ensure reliable long-term use
•Meets world's most stringent environmental legislation
•Guaranteed low fuel and oil consumption
• Reduced vibration and noise level

SPECIFICATIONS

Engine Type	Single cylinder OHV 4-stroke air-cooled
Max. Net Torque (Nm) @ 2'500 rpm	26.4
Displacement (cc)	389
Cylinder	Cast Iron Sleeve
Bore (mm)	88.0
Stroke (mm)	64.0
Fuel Tank Capacity (l)	6.1
Oil Capacity (l)	1.1
Dry Weight (kg)	31.7
Dimensions Length (mm)	406
Dimensions Width (mm)	460
Dimensions Height (mm)	448
Recoil Start	Yes
Electric Start	No

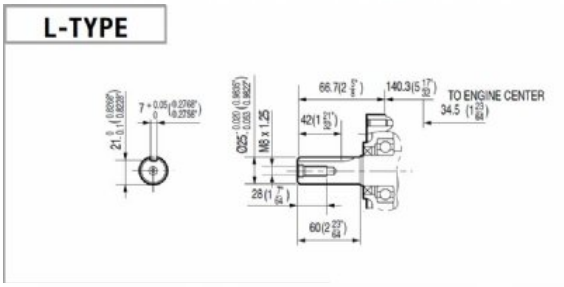

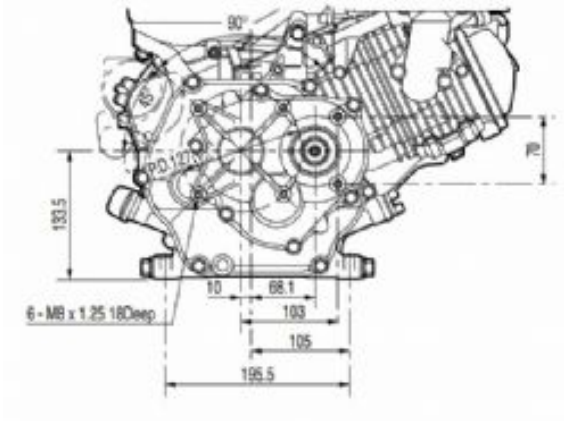

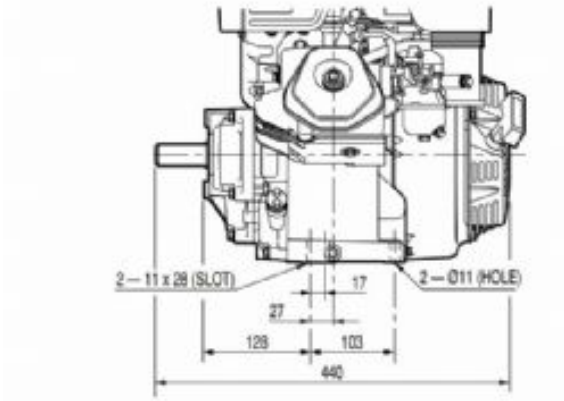

GearGB
Hart Industrial Tools
White Hart Court,
Hart Village,
Hartlepool
TS27 3AW